Measuring System “trikon®“ Vortex Flow Meter VTX2 in Microprocessor Technology

Application

Metering and recording of volume or mass flow of gases, liquids and steam.

Vortex meter “trikon“ VTX2

Special Features

- Robust static measuring principle
- All wetted parts in stainless steel
- No moving parts in the flow section
- Mainly maintenance-free
- Installation in horizontal and vertical pipelines
- Largely insensitive to piping vibrations
- Multifunctional display
- Analog and pulse output
- Patented sensor for reliable vortex separation
- Explosion-proof

General

The vortex meter VTX2 consists of :

- Measuring device
- Interconnection
- Sensor unit
- Electronic processing system

The vortex meter “trikon“ is used as a flow meter for gases, steam and liquids. Due to the static measuring principle there are no moving parts in the flow section. The measuring system is mostly wear-resistant and insensitive to blinding and vibrations of the piping system.
The “trikon“ applicant is provided with an economical and a state-of-the-art measuring system.

Function and measuring principle

If a flow resistance is surrounded by a fluid, beginning with a certain minimum flow velocity mutual vortexes are separated moving downstream. This physical effect has been known as „Kármán´s Vortex Trail“ for a long time.
The vortex meter of the series “trikon“ uses a trapezoid bluff body which guarantees for a precise vortex separation with high reproductibility in liquids as well as in gaseous fluids and steam.
The exact dimensioning of the bluff body and a defined separation edge ensure that the vortex frequency is proportional to the flow velocity. The vortexes which are mutually separated from the obstruction (vortex frequency) produce local changes in velocity and pressure which can be read by a sensor and then transformed into a measured value (4-20 mA, counter pulses) in the subsequent electronic device with auto-adaptive, microprocessor-controlled filtering.

1 Measuring tube
2 Disturbance
3 Fluid flow
4 Vortex street

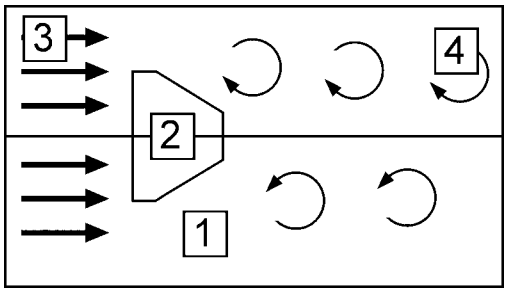

Principle of ,,Kármán´s Vortex Trail"

Technical Data EDZ 420

Nominal diameter DN	15	25	40	50	80	100	150	200	250*	300
Nominal pressure	PN40 / sandwich type									
Gases, steam										
Minimum flow q_{min} [m^3/h]	2	5	10	15	40	60	130	250	400	500
Maximum flow q_{max} [m^3/h]	25	130	330	560	1600	2300	5300	9400	16000	20000
Fluids										
Minimum flow q_{min} [m^3/h]	0.4	1	2.5	4	6	10	20	40	80	120
Maximum flow q_{max} [m^3/h]	8	20	50	80	180	300	600	1200	1800	2500
Pressure loss Δp	$\Delta p = 1400 \times \rho_B \times q_B / DN^4$ (mbar) ρ_B (kg / m^3) operating density; q_B (m^3 / h) operating flow; DN nominal diameter									
Deviation of measured value	fluids: ≤ ± 1.0% of measured value if calibrated gases,steam : ≤ ± 1.0% of measured value if calibrated									
Reproductivity	± 0.15 % of measured value									
Operating temperature	- 40 °C to 300 °C in non- explosion proof applications, up to 260 °C in explosion proof applications									
Material	Measuring device: Sensor and vortex counter : 1.4571 Measuring ring : 1.44.04 Transducer : Cast Aluminum									
Admissible ambient temperature	– 40 °C to 70 °C									
Protection class	IP 67									
Multi-functional LC Display	8 digit display									
Output	4 – 20 mA / HART and additional scaleable pulse output NAMUR									
Power supply	24 V DC, 2-wire									
Measuring protocol	3 measuring points (basis: water)									

Additional equipment

Exi supply unit (electrically isolated)
Inlet and outlet pipe sections with centering flange for masuring ring, pressure tap for p abs. transducer (optional)
Intermediary for pre-installation
Test cerificate for 10 flow measuring points (basis: water)
Ex approval : DMT 99 ATEX E 078 X II ½ G EEx ia II CT 6
System test, commissioning and instruction by Metra service personnel (charges according to expenditure)

Pressure loss

The remaining pressure loss is calculated according to the following formula:

$\Delta p = zp \cdot \rho \cdot V^2 / DN^4$

Δp	pressure loss (mbar)
zp	1400 pressure loss coefficient
ρ	operating density (kg/m^3)
V	operating flow (m^3/h)
DN	nominal diameter of flow meter (mm)

Example
ρ = 7.1 kg/m^3
V = 230 m^3/h
DN = 100 mm
$\Delta p = 1400 \times 7.1 \times 230^2/100^4 = 5.25$ mbar

Installation hints

Fitting position:
The flow transmitter can be installed in horizontal or vertical pipelines.

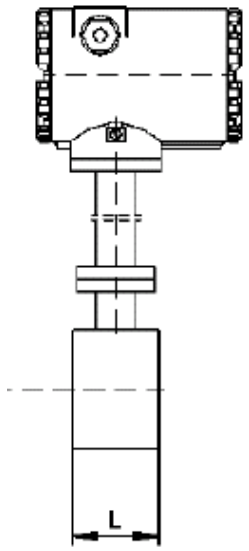

Horizontal

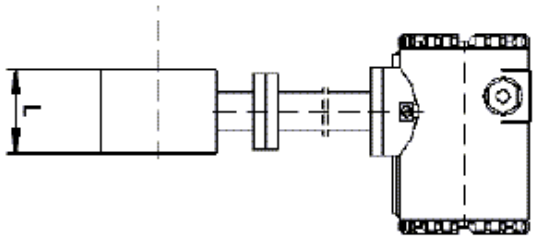

Vertical

Mounting

To achieve exact measurements, the flush centering of the volume sensor with respect to the piping is required.

Inlet pipe disturbances

If there are any pipe reductions, extensions, elbows etc. installed upstream of the volume sensor, the following inlet pipe sections are required :

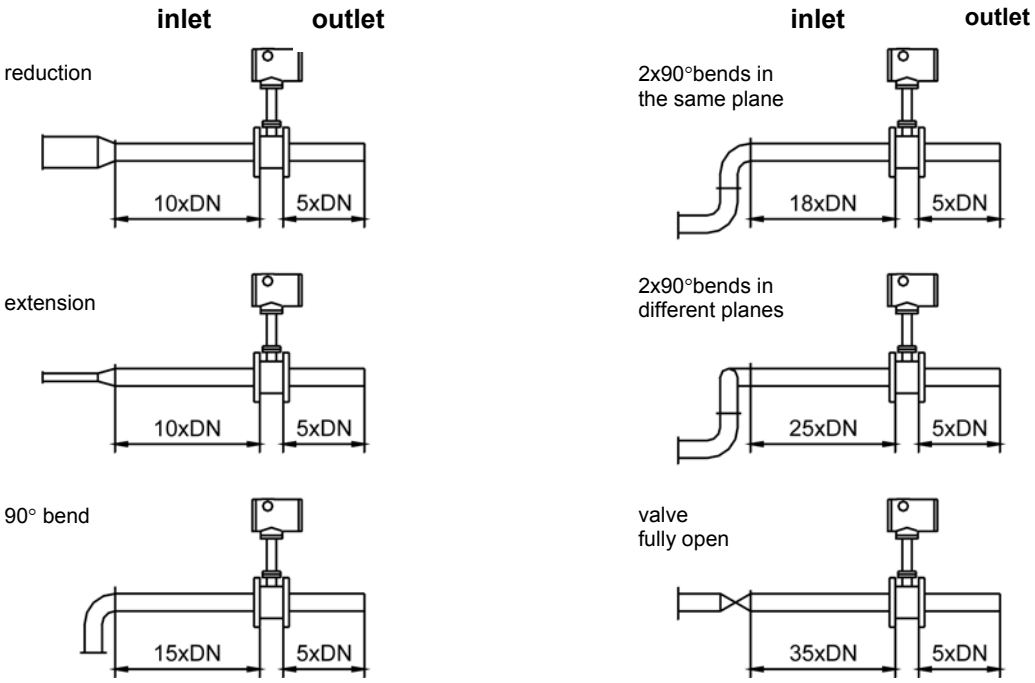

Inlet and outlet pipe sections (applies only for sandwich version)

For the exact centering of the measuring ring in the pipeline, we recommend the use of Metra centering flanges with inlet and outlet piping sections including bolts and gaskets. For pre-installation or pressurizing and flushing of the plant, intermediaries should be used.

If the inlet and outlet pipe sections are not supplied by Metra, please ensure that the internal pipe diameter matches the measuring ring width „d“ exactly. The measuring rings comply with the nominal pressure rate PN 40. Please refer to the table below for the corresponding intermediaries. In case of pipe reductions or extensions please make sure that they are concentric.

Dimensions of inlet and outlet pipe sections

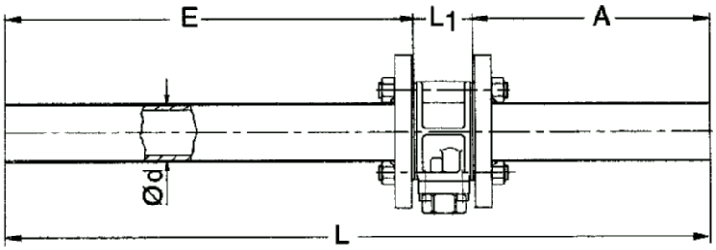

Nominal diameter	Pressure rating
DN 15 to DN 50	PN16, PN25, PN40
DN 65 to DN 125	PN25, PN40

Nominal diameter	DN	15	25	40	50	80	100	150	200	250	300
L	(mm)	500	600	750	1000	1400	1800	on demand			
E	(mm)	265	331	437	621	891	1151	on demand			
A	(mm)	166	200	244	310	440	580	on demand			
Internal diameter d	(mm)	17.3	28.5	43.1	54.5	82.5	107.1	159.3	206.3	258.8	307.9
L_S 2 x 2 mm gasket	(mm)	65						90	120	140	160
Nominal pressure	PN	40									

Please note:
The length of the inlet and outlet pipe sections is always dependent on the inlet disturbance.

Dimensions

Nominal diameter	DN	15	25	40	50	80	100	150	200	250	300
Nominal pressure	PN	40									
LS	(mm)	65						90	120	140	160
H	(mm)	335	335	340	340	350	365	400	430	460	500
Weight sandwich version	(kg)	2	2.5	3	3.5	9.5	12.5	20.5	30.5	40.5	55

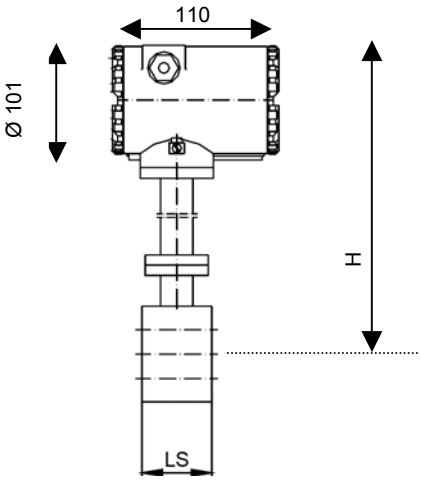

sandwich version

Vortex meter “trikon®“ VTX2 in Microprocessor Technology

Text for quotations and orders:

Flow meter “trikon“ EDZ 420 in microprocessor technology consisting of:
“trikon“ vortex meter with tandem transmitter and adaptive filtering. Especially insensitive to pipe vibrations and overload
DN …, PN …, nominal flow … m^3/h, t/h,
fluid …, operating temperature … °C,
operating pressure … bara,
fitting position …horizontal / vertical
multi-functional LC Display for Q, m (m^3/h, t/h)
electronic counter for V, m in m^3, t
resettable counter
Analog output: 4 - 20 mA proportional to volume or mass flow
and
current pulses 4 - 5 mA low, 18 - 20 mA high
proportional to volume or mass flow
material: all wetted in stainless steel
power supply 24 V DC, 2-wire

Additional Equipment

Ex protection: intrinsically safe according to EExib II CT6
Exi supply unit (electrically isolated)
inlet and outlet pipe sections with centering flange for measuring ring
intermediary for pre-installation
measuring protocol for 10 flow datapoints (basis: water)

Fuji Electric

Fuji Electric France S.A.S.
46, Rue Georges Besse - Z I du Brézet - 63 039 Clermont-Ferrand cedex 2 FRANCE
France : Tél. 04 73 98 26 98 - Fax 04 73 98 26 99 - International : Tél. (33) 4 7398 2698 - Fax. (33) 4 7398 2699
E-mail : sales.dpt@fujielectric.fr – WEB : www.fujielectric.fr